CIVIC SPLINE DATA
27 TEETH
1 MODULE
45 DEGREE PA
1.235/1.233 OVER .104 PINS

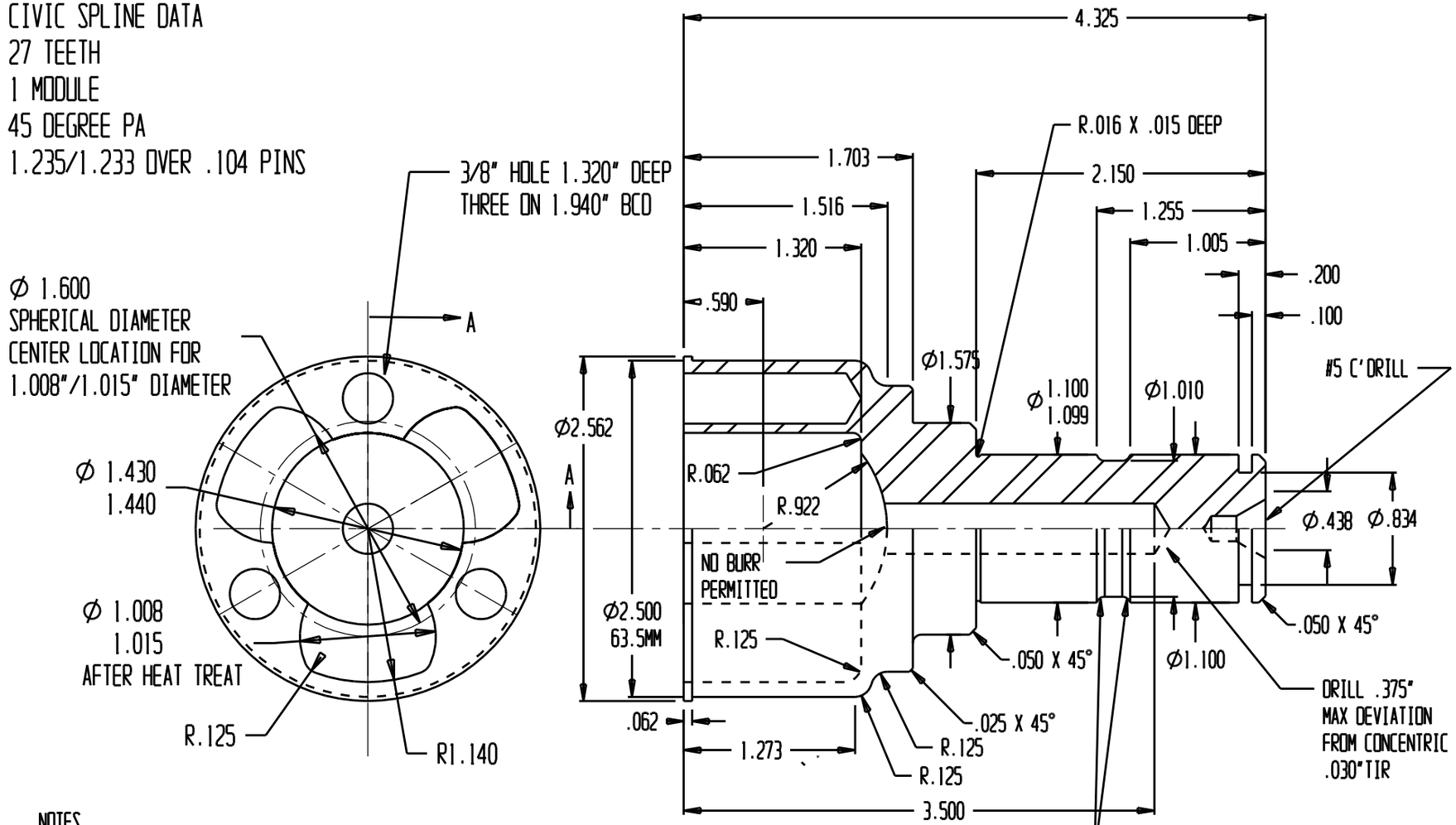

NOTES
1. PART TO BE CLEAN AND BURR FREE
2. BREAK ALL CORNERS, INSIDE AND OUT .010"
3. NO SCUFFS OR ABRASIONS
4. SURFACE FINISH TO BE RA 32 OR BETTER UNLESS OTHERWISE NOTED

NOTE: 3/8" HIDDEN DRILL HOLES DELETED TO REDUCE CLUTTER

NOTE: ROUGHNESS AVERAGE 16 IN RADIUS AND 1.010 SECTION

DATE	LEV.	REVISION	E.C.N.	DR.	CK.
9/27/06	3	RELEASE FOR PRODUCTION	CS		
3/14/08		UPDATE JOURNAL DIAMETER	DT		

ALLOWABLE TOLERANCES (UNLESS SPECIFIED)
DECIMAL
.00= +/- .02
.000= +/- .005
.0000= +/- /.0005
ANGLES = +/- 1 DEG.

DRAWN: CT
SCALE:
DATE: 9/27/06
CHECKED:

ALL INFORMATION CONTAINED IN THIS DOCUMENT IS THE SOLE PROPRETY OF AND PROPRIETARY TAYLOR RACE ENGINEERING, INC. AND IS NOT TO BE USED WITHOUT WRITTEN PERMISSION OF TRE, INC. PRIOR TO IT'S USE

MATERIAL: AISI C-4340
MAT'L CODE:

HEAT TREAT: Rc 48-50
FINISH: BLACK OXIDE

TAYLOR RACE ENGINEERING
2010 AVENUE G UNIT 914
PLANO TX 75074

NAME: STUB AXLE TULIP
HONDA CIVIC

PART NO.: INV- 02004202